QUADRA 110 SOTTOTOP

Technical Drawing

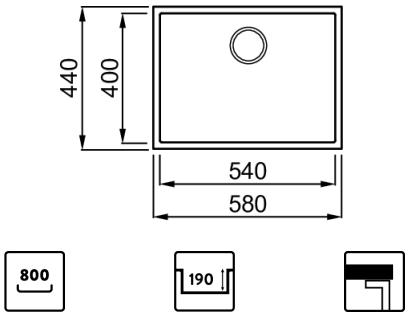

	1-bowl sink
Model	QUADRA 110 SOTTOTOP
Base *(mm)*	800
	Undermount
Dimensioni *(mm)*	580 x 440
Dimensioni *(mm)*	540 x 400 R5
Number of Bowls	
Bowl Depth *(mm)*	190

Base *(kg)*	11,79
Net Weight *(kg)*	8,53
Packaging Dimension *(kg)*	690 x 575 x 300
(kg)	0,119

Packaging	Cardboard and polyethylene
	Space-saving siphon, wastes and hooks.

KERATEK® Plus
CERAMIC NANOTECHNOLOGY CN6

LKQ11086BSO K86
8031873020934

LKQ11093BSO K93
8031873027322

LKQ11095BSO K95
8031873025861

LKQ11096BSO K96
8031873020927

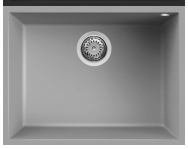

LKQ11097BSO K97
8031873027346

LKQ11099BSO K99
8031873027360

GRANITEK®
NATURAL GRANITE EFFECT

METAL

LMQ11070BSO M70
8032861956600

LMQ11073BSO M73
8032861956624

LMQ11078BSO M78
8032861956761

LMQ11079BSO M79
8032557953036

GRANITEK®
NATURAL GRANITE EFFECT

MATT

LGQ11040BSO G40
8032557049517

LGQ11043BSO G43
8032861041832

LGQ11048BSO G48
8032557030683

LGQ11068BSO G68
8032861056584

GRANITEK®
NATURAL GRANITE EFFECT

CLASSIC

LGQ11051BSO G51
8032861056515

LGQ11052BSO G52
8032861056522

LGQ11054BSO G54
8032861056546

LGQ11059BSO G59
8032861056560

LGQ11062BSO G62
8032861056577

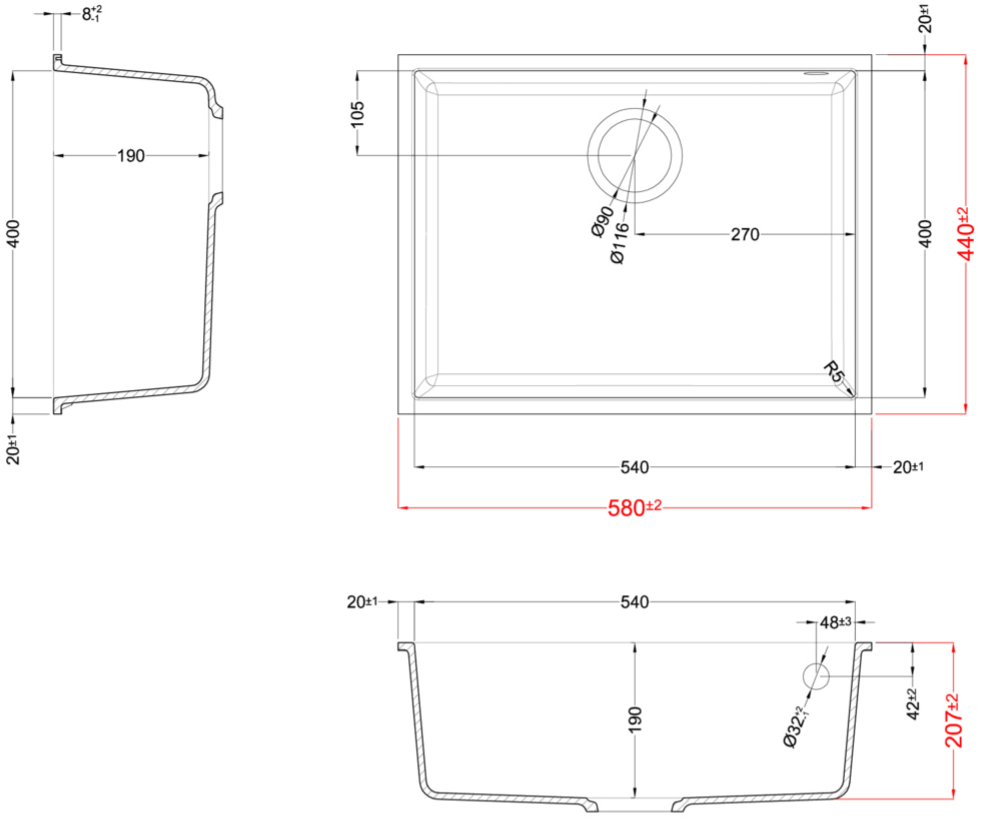

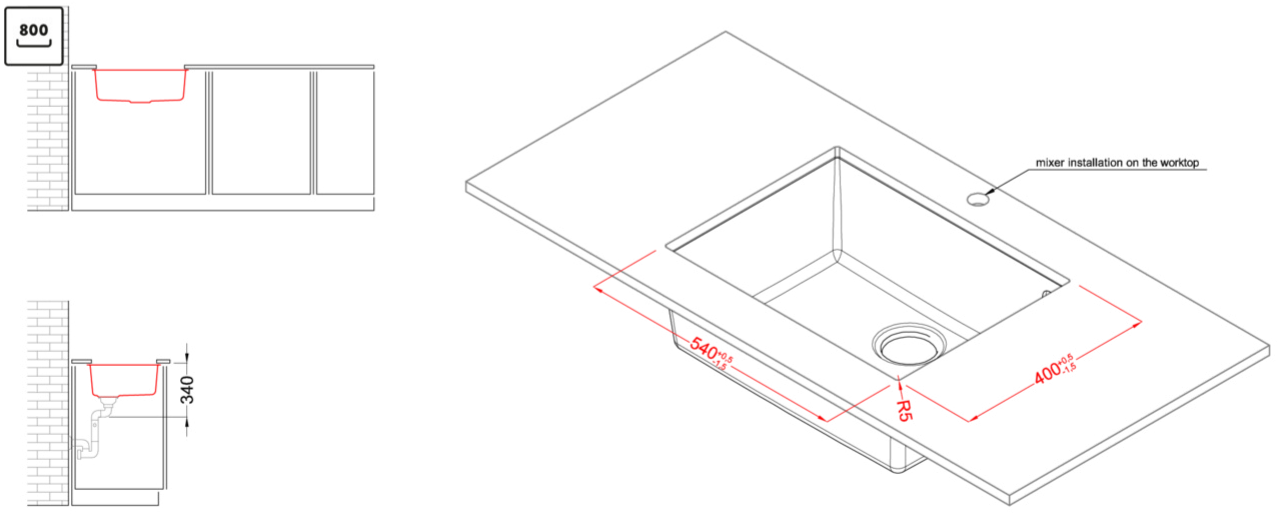

QUADRA 110 UNDERMOUNT

general tolerances where not expressly communicated ±0.2%
connection dimensions according to UNI EN 695