# TEKNO 400

**Technical Drawing**

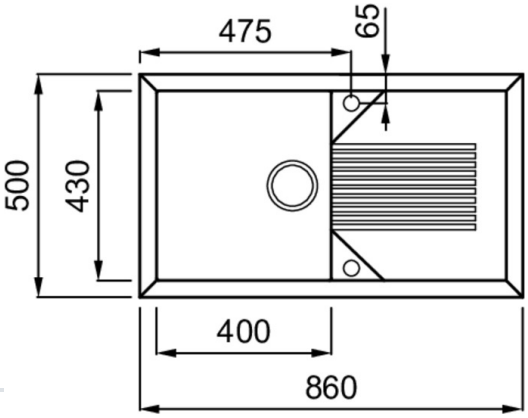


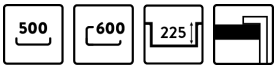


| | |
|---|---|
| | 1-bowl sink with drainer |
| **Model** | TEKNO 400 |
| **Base** *(mm)* | 500 ||| 600 if first component |
| | Inset |
| **Dimensioni** *(mm)* | 860 x 500 |
| **Dimensioni** *(mm)* | 840 x 480 |
| **Number of Bowls** | |
| **Bowl Depth** *(mm)* | 225 |

| | |
|---|---|
| **Base** *(kg)* | 17,93 |
| **Net Weight** *(kg)* | 12,00 |
| **Packaging Dimension** *(kg)* | 940 x 575 x 300 |
| *(kg)* | 0,162 |

| | |
|---|---|
| **Packaging** | Cardboard and polyethylene |
| | Space-saving siphon, wastes and hooks. |

GRANITEK®
NATURAL GRANITE EFFECT

METAL

**LMT40073** M73
8032557957799

**LMT40079** M79
8032557952794

GRANITEK®
NATURAL GRANITE EFFECT

MATT

**LGT40040** G40
8032557049043

**LGT40043** G43
8032861041757

**LGT40048** G48
8032557038054

**LGT40068** G68
8032557057758

GRANITEK®
NATURAL GRANITE EFFECT

CLASSIC

**LGT40051** G51
8032557057611

**LGT40059** G59
8032557057697

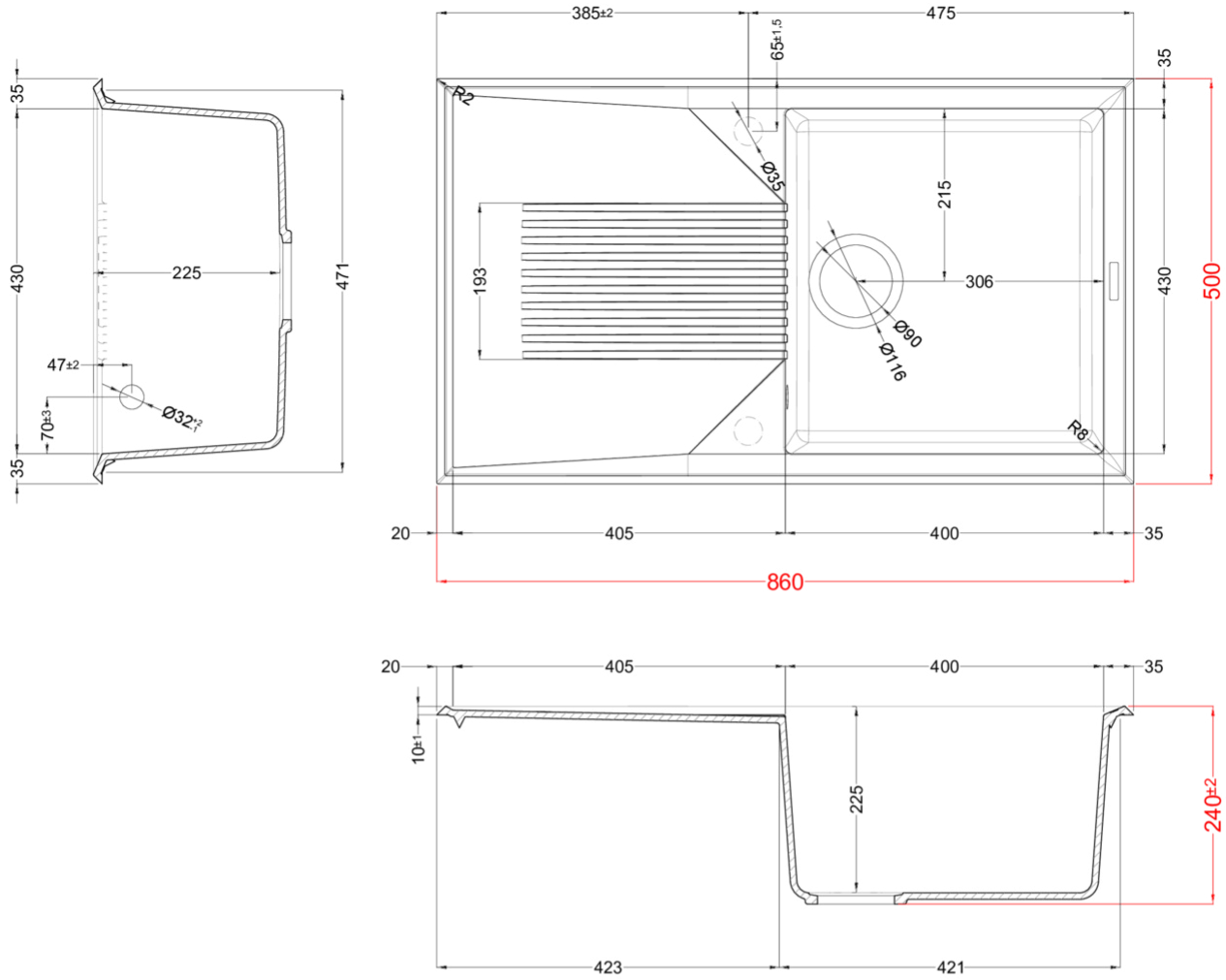


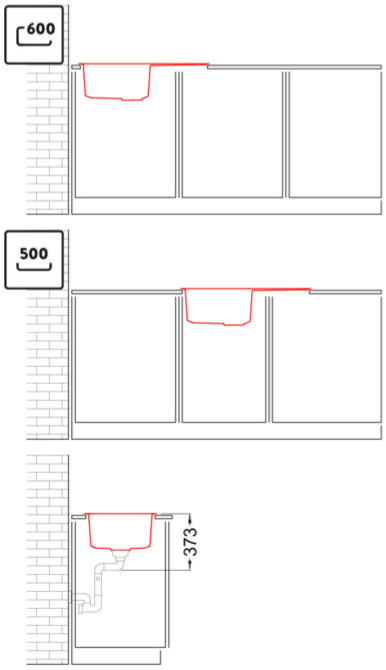


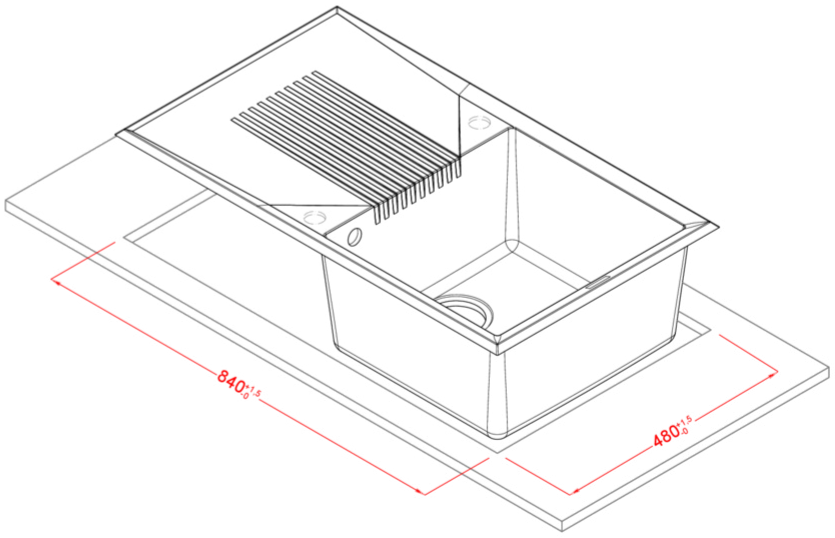


# TEKNO 400

general tolerances where not expressly communicated ±0.2%
connection dimensions according to UNI EN 695