QUADRA 440 SOTTOTOP

Technical Drawing

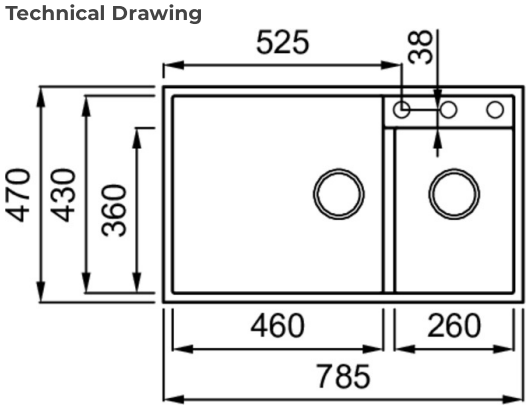

	2-bowl sink
Model	QUADRA 440 SOTTOTOP
Base *(mm)*	900
	Undermount
Dimensioni *(mm)*	785 x 470
Dimensioni *(mm)*	745 x 430 R5
Number of Bowls	
Bowl Depth *(mm)*	215

Base *(kg)*	14,48
Net Weight *(kg)*	10,83
Packaging Dimension *(kg)*	940 x 575 x 300
(kg)	0,165

Packaging	Cardboard and polystyrene
	Space-saving siphon, wastes and hooks.

GRANITEK®
NATURAL GRANITE EFFECT

METAL

LMQ44073BSO M73
8032861956785

LMQ44079BSO M79
8032861956778

GRANITEK®
NATURAL GRANITE EFFECT

MATT

LGQ44040BSO G40
8031873035853

LGQ44043BSO G43
8031873035846

LGQ44068BSO G68
8031873035822

GRANITEK®
NATURAL GRANITE EFFECT

CLASSIC

LGQ44051BSO G51
8031873035839

elleci

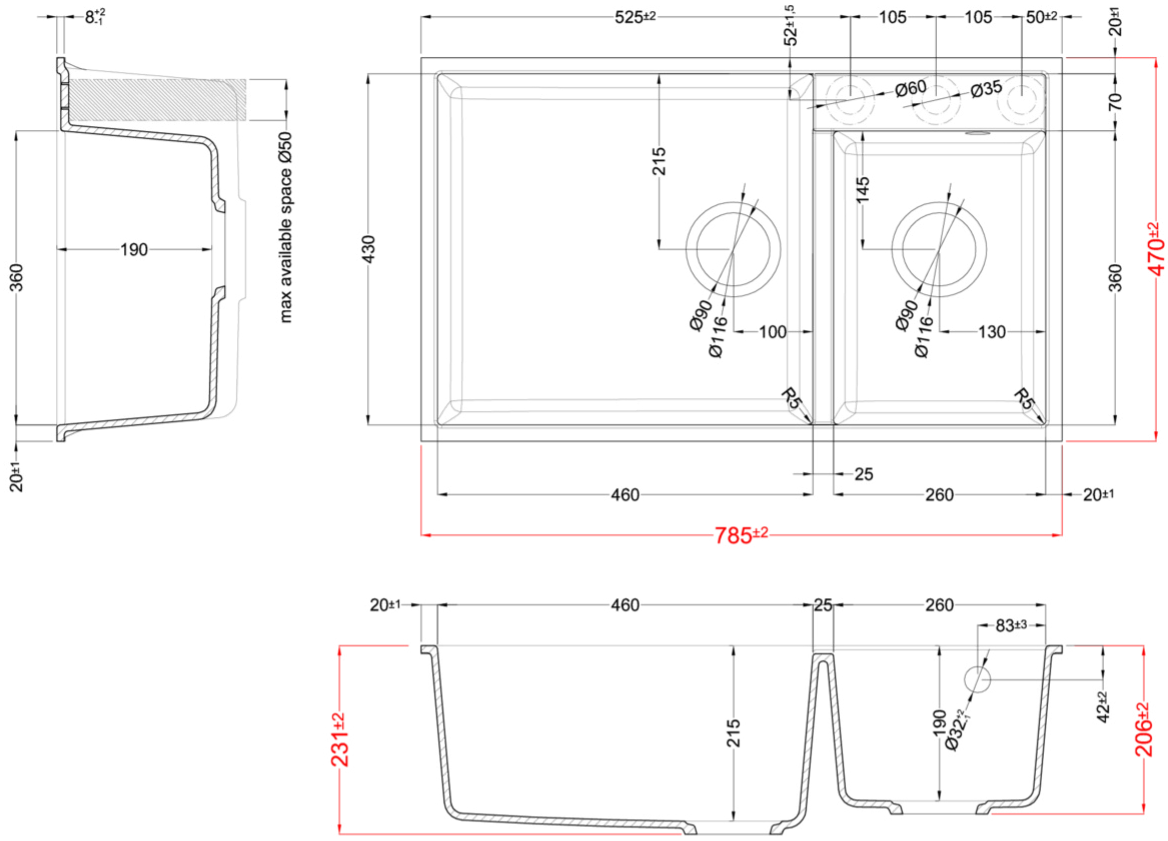

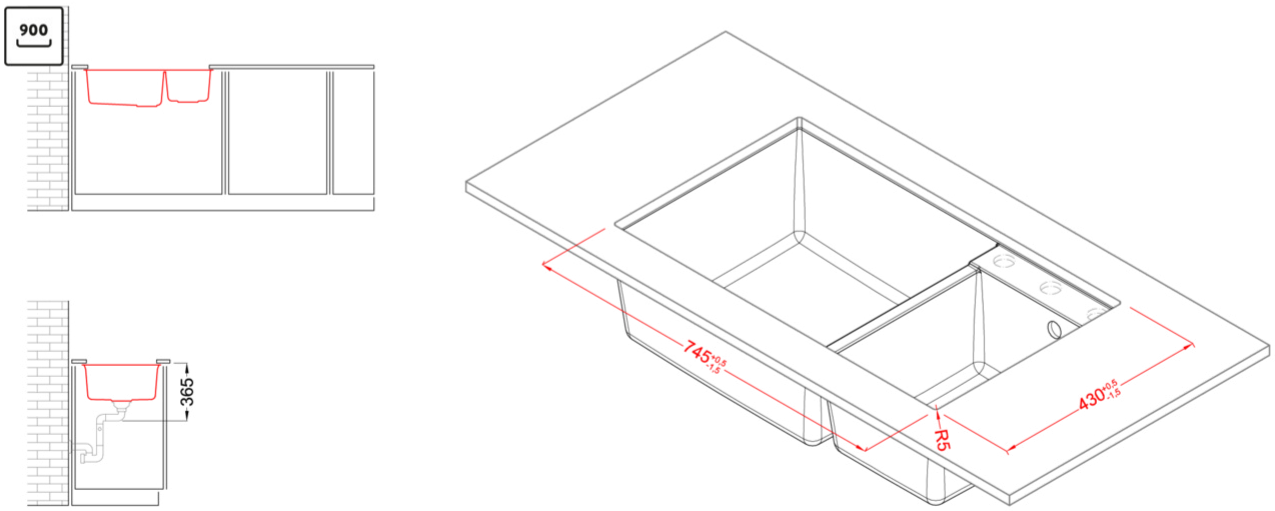

QUADRA 440 UNDERMOUNT

general tolerances where not expressly communicated ±0.2%
connection dimensions according to UNI EN 695