LIVING 400

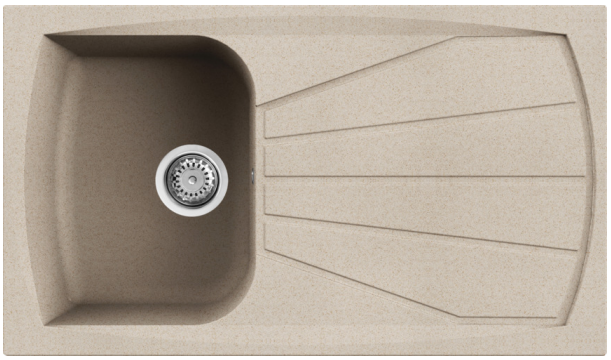

Technical Drawing

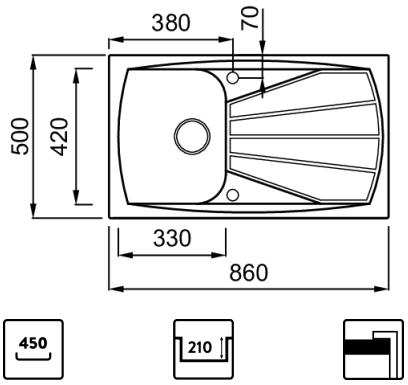

	1-bowl sink with drainer
Model	LIVING 400
Base *(mm)*	450
	Inset
Dimensioni *(mm)*	860 x 500
Dimensioni *(mm)*	840 x 480
Number of Bowls	
Bowl Depth *(mm)*	210

Base *(kg)*	15,79
Net Weight *(kg)*	10,10
Packaging Dimension *(kg)*	940 x 575 x 300
(kg)	0,162

Packaging	Cardboard and polyethylene
	Space-saving siphon, wastes and hooks.

GRANITEK®
NATURAL GRANITE EFFECT
METAL

LML40073 M73
8032557956129

LML40079 M79
8032557953258

GRANITEK®
NATURAL GRANITE EFFECT
MATT

LGL40040 G40
8032557043867

LGL40068 G68
8032557056096

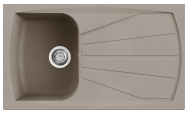

LGL40043 G43
8031873069377

GRANITEK®

NATURAL GRANITE EFFECT

CLASSIC

LGL40051 G51
8032557055198

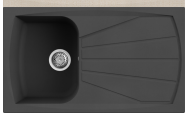

LGL40059 G59
8032557056034

LGL40052 G52
8032557055204

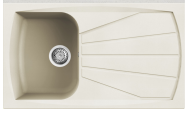

LGL40062 G62
8032557056041

LGL40054 G54
8032557055211

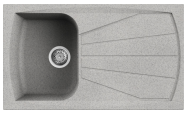

LGL40055 G55
8032557056010

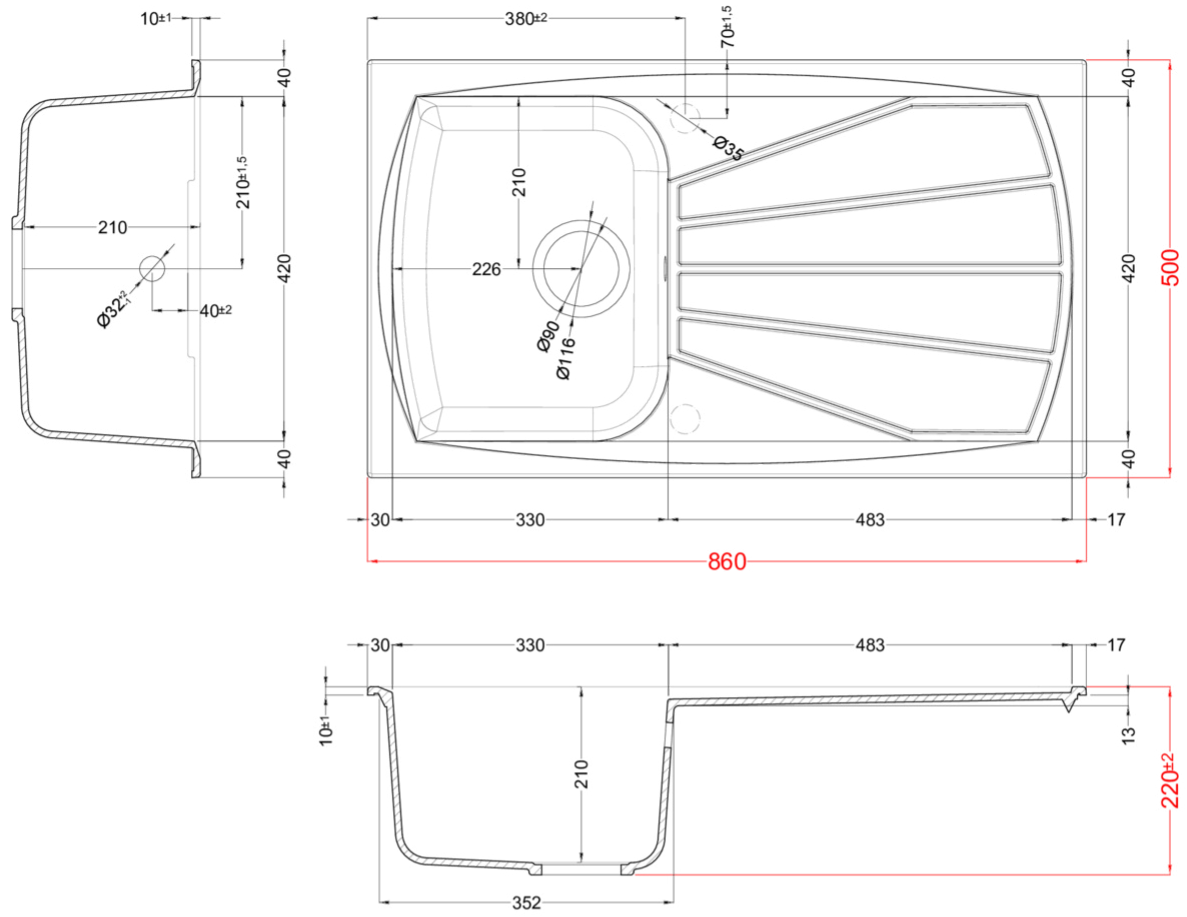

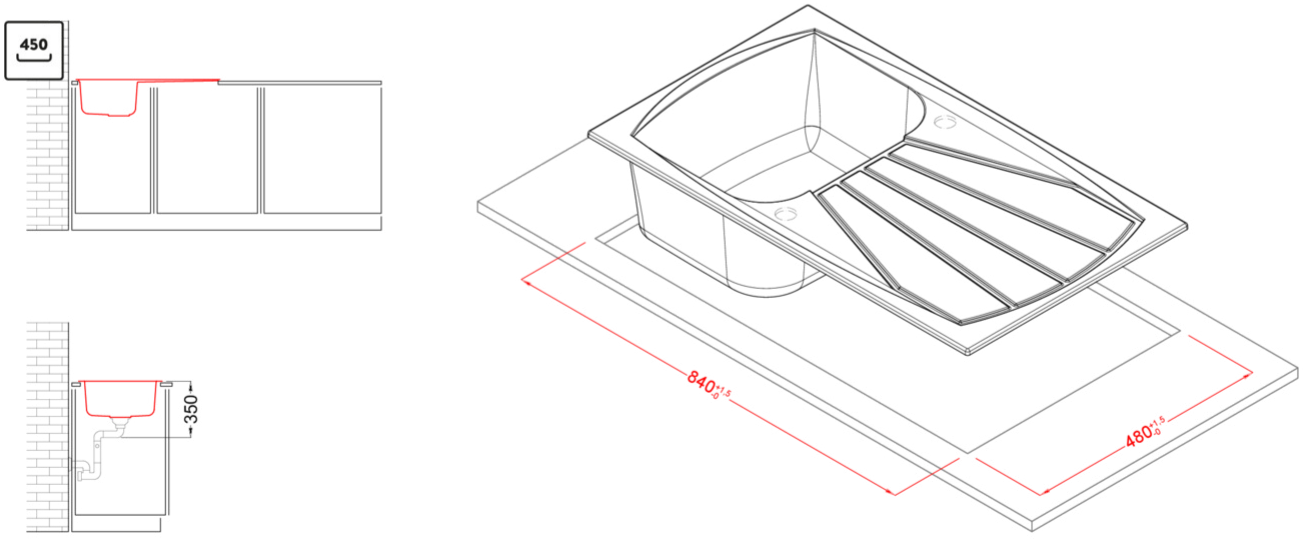

LIVING 400

general tolerances where not expressly communicated ±0.2%
connection dimensions according to UNI EN 695