FOX ROUND

Technical Drawing

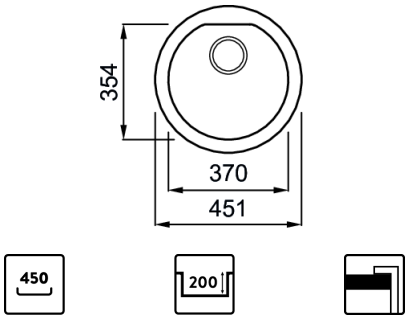

	1-bowl sink
Model	FOX ROUND
Base *(mm)*	450
	Inset
Dimensioni *(mm)*	Ø 451
Dimensioni *(mm)*	Ø 430
Number of Bowls	
Bowl Depth *(mm)*	200

Base *(kg)*	9,95
Net Weight *(kg)*	5,70
Packaging Dimension *(kg)*	575 x 575 x 300
(kg)	0,099

Packaging	Cardboard and polystyrene
	Space-saving siphon, wastes and hooks.

GRANITEK®
NATURAL GRANITE EFFECT
MATT

LGFROU40 G40
8032557043492

LGFROU68 G68
8031873051785

GRANITEK®
NATURAL GRANITE EFFECT
CLASSIC

LGFROU51 G51
8031873051235

LGFROU59 G59
803187305AC10230156

LGFROU62 G62
8031873051631

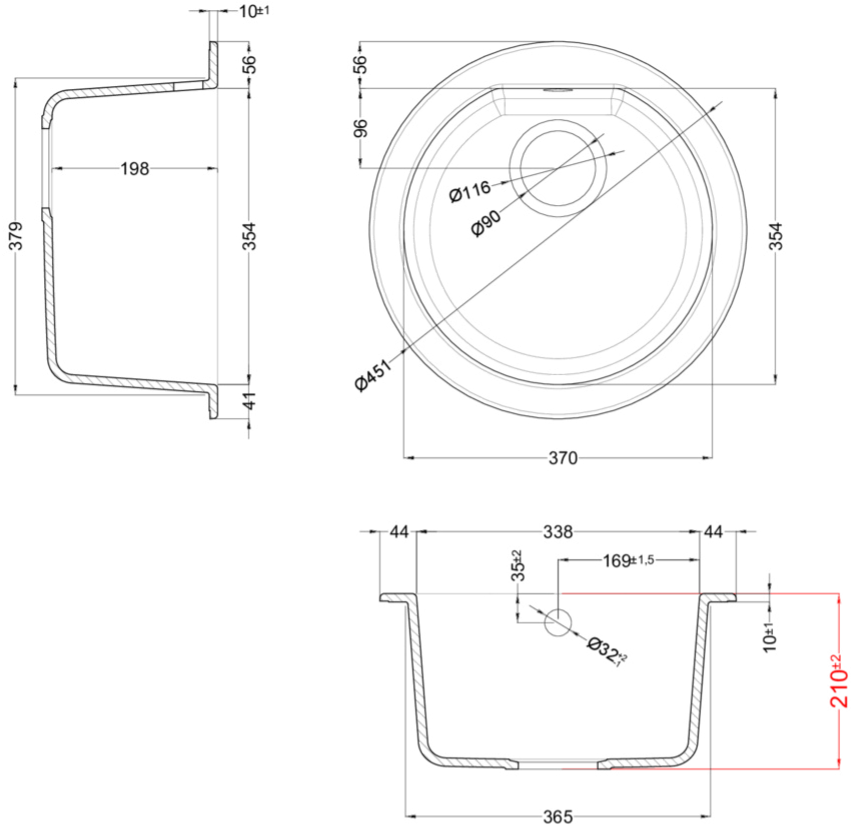

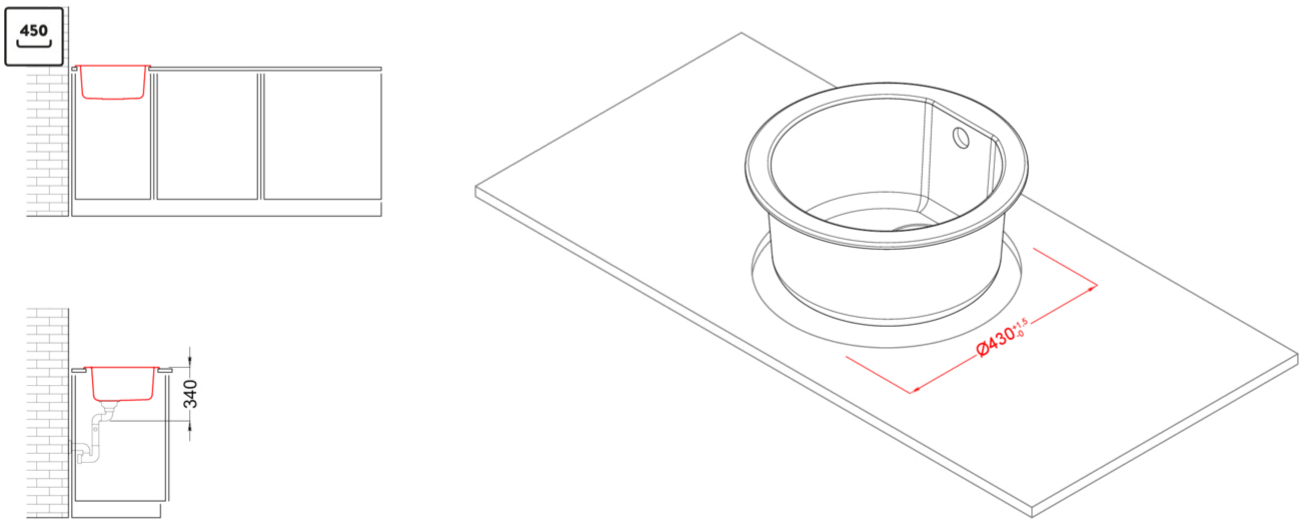

FOX ROUND

general tolerances where not expressly communicated ±0.2%
connection dimensions according to UNI EN 695