UNICO 480

Technical Drawing

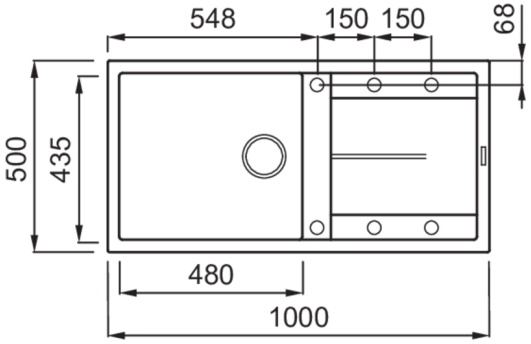

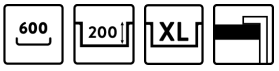

	1-bowl sink with drainer
Model	UNICO 480
Base *(mm)*	600
	Inset
Dimensioni *(mm)*	1000 x 500
Dimensioni *(mm)*	980 x 480
Number of Bowls	
Bowl Depth *(mm)*	200

Base *(kg)*	19,17
Net Weight *(kg)*	13,20
Packaging Dimension *(kg)*	1080 x 575 x 300
(kg)	0,186

Packaging	Cardboard and polyethylene
	Space-saving siphon, wastes and hooks.

KERATEK® Plus
CERAMIC NANOTECHNOLOGY CN6

LKU48097 K97
8032557023951

LKU48096 K96
8031873028671

LKU48093 K93
8032557027287

LKU48086 K86
8031873028619

GRANITEK®
NATURAL GRANITE EFFECT

METAL

LMU48073 M73
8031873110499

LMU48079 M79
8031873110611

GRANITEK®
NATURAL GRANITE EFFECT

MATT

LGU48040 G40
8032557036289

LGU48043 G43
8032557037170

LGU48048 G48
8032557036517

LGU48068 G68
8032557036524

elleci

GRANITEK®
NATURAL GRANITE EFFECT

CLASSIC

LGU48051 G51
8032557038269

LGU48059 G59
8032557038276

LGU48062 G62
8032557037637

elleci

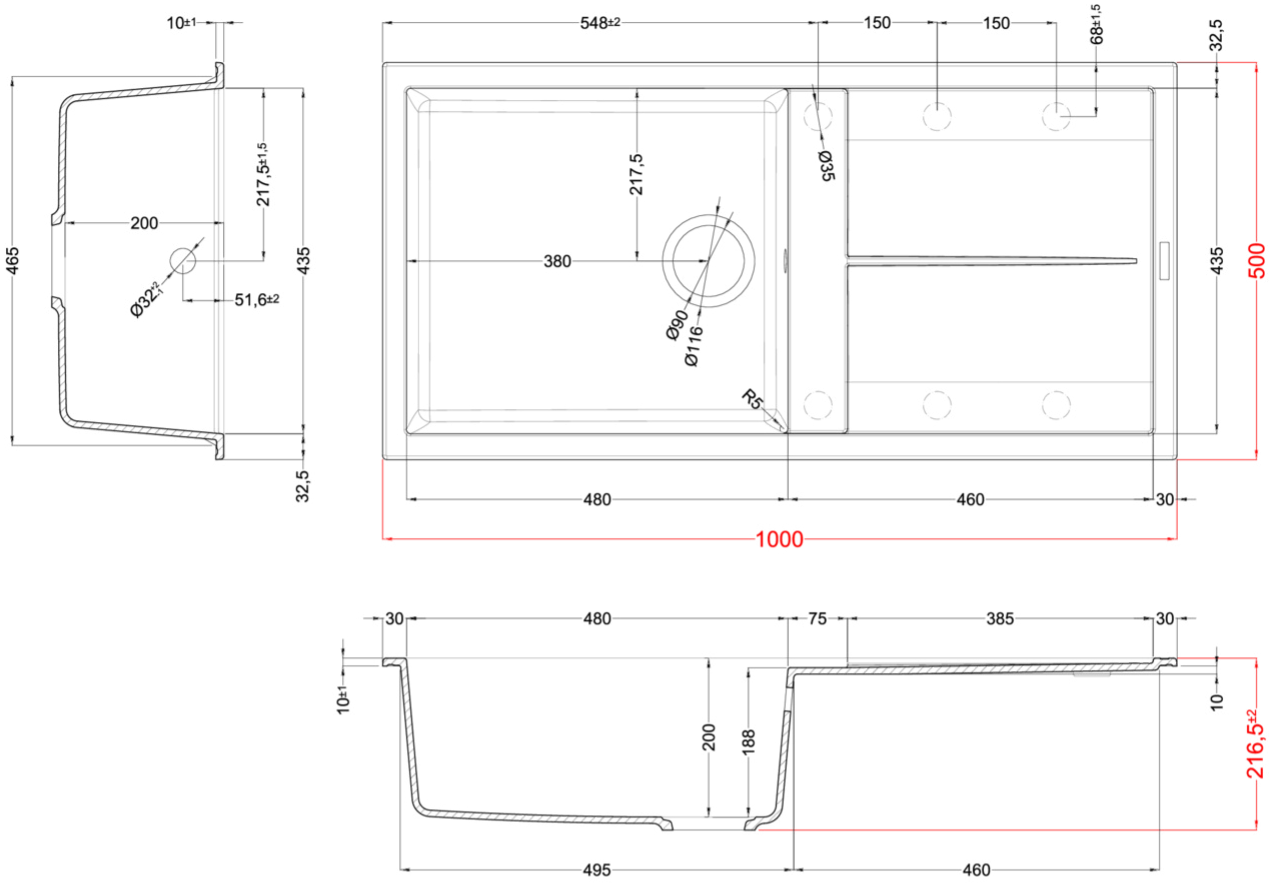

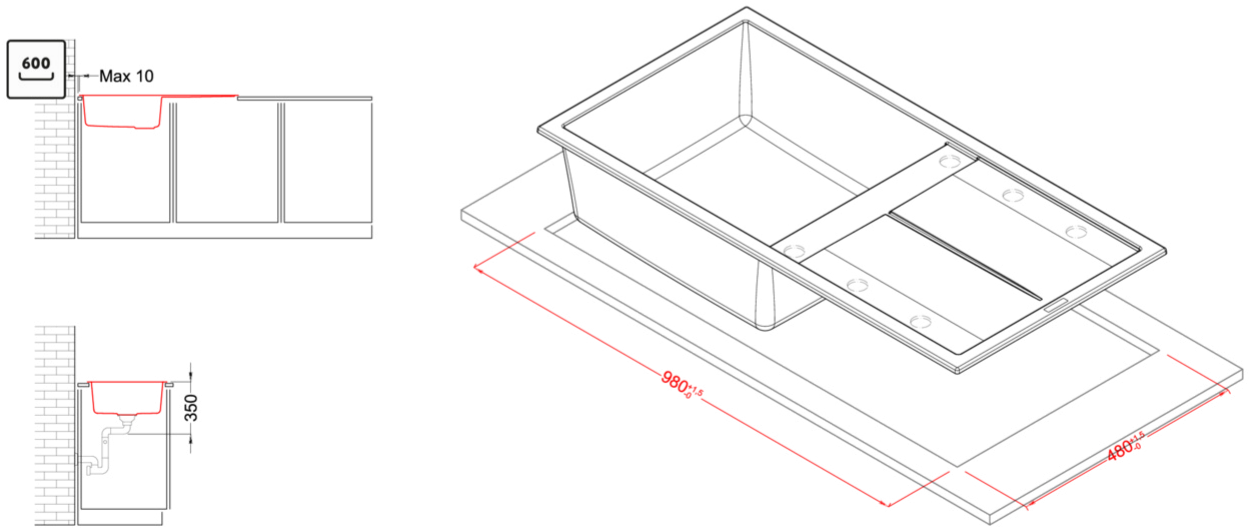

UNICO 480

general tolerances where not expressly communicated ±0.2%
connection dimensions according to UNI EN 695