LIFE 400

Technical Drawing

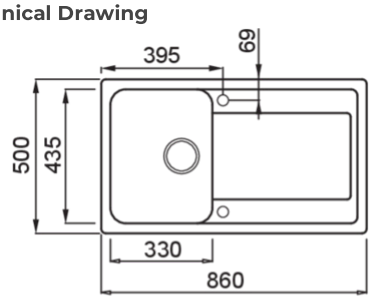

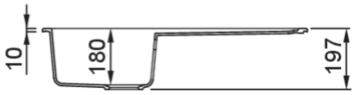

0	
Description	1-bowl sink with drainer
Model	LIFE 400
Base *(mm)*	450
0	Inset
Dimensions *(mm)*	860 x 500
Hole for built-in installation *(mm)*	840 x 480
Number of Bowls	1
Bowl Depth *(mm)*	180

0	
Packaging Dimension *(kg)*	940 x 575 x 300
0 *(kg)*	0,162

0	
0	Space-saving siphon, wastes and hooks.

GRANITEK®
NATURAL GRANITE EFFECT

METAL

LM240073 M73
8032557110255

LM240079 M79
8032557110262

GRANITEK®
NATURAL GRANITE EFFECT

MATT

LG240078 G78
8032557068082

LG240040 G40
8032557068013

LG240043 G43
8032557068020

LG240048 G48
8032557068037

LG240068 G68
8032557068075

elleci®
COMPANY

GRANITEK®
NATURAL GRANITE EFFECT

CLASSIC

LG240051 G51
8032557068044

LG240059 G59
8032557068051

LG240062 G62
8032557068068

elleci® COMPANY

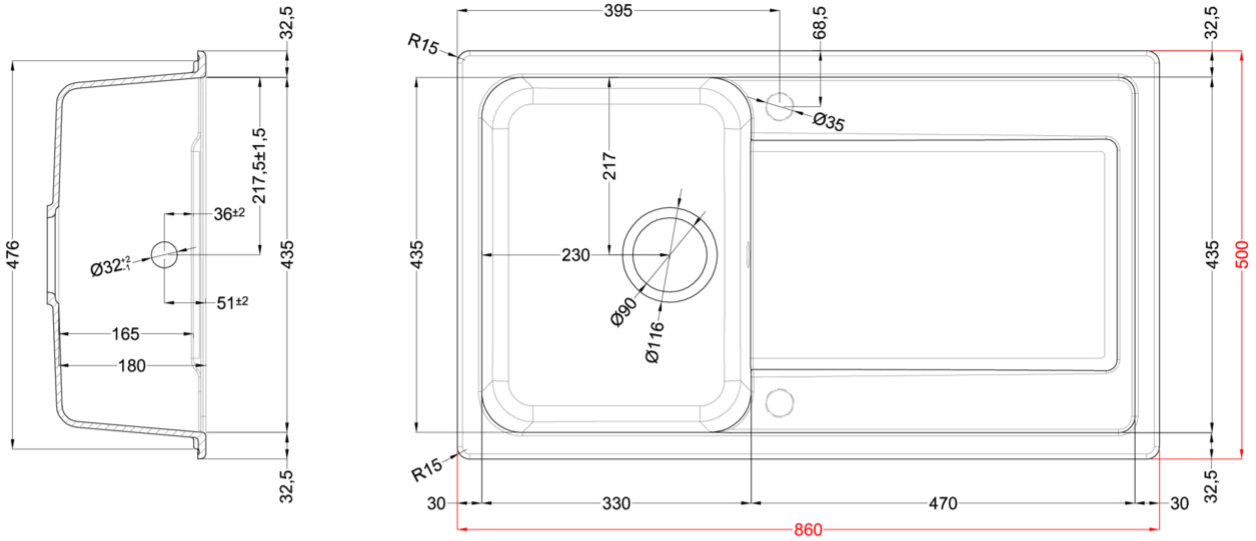

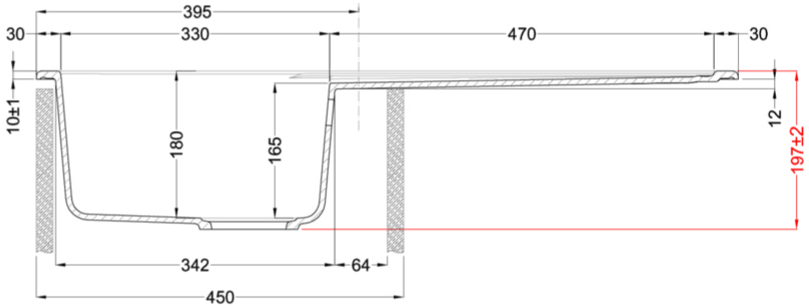

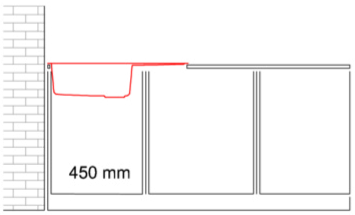

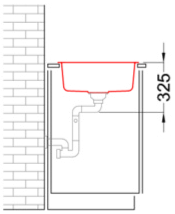

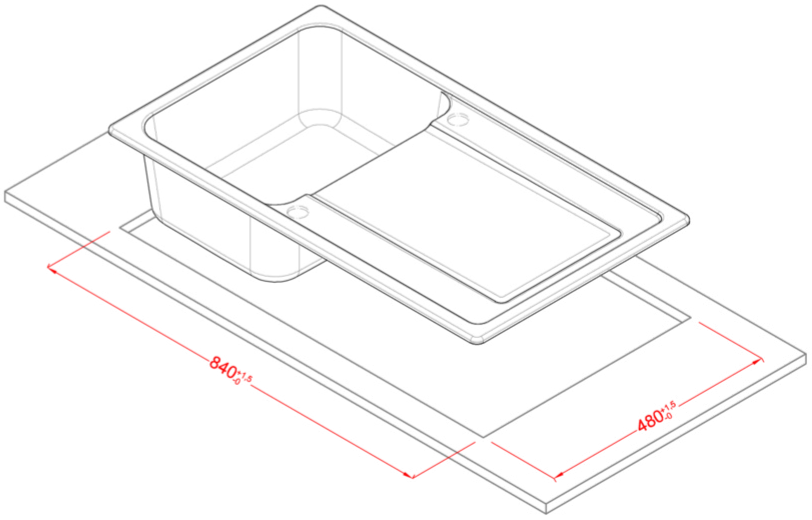

LIFE 400

general tolerances where not expressly communicated ±0.2%
connection dimensions according to UNI EN 695